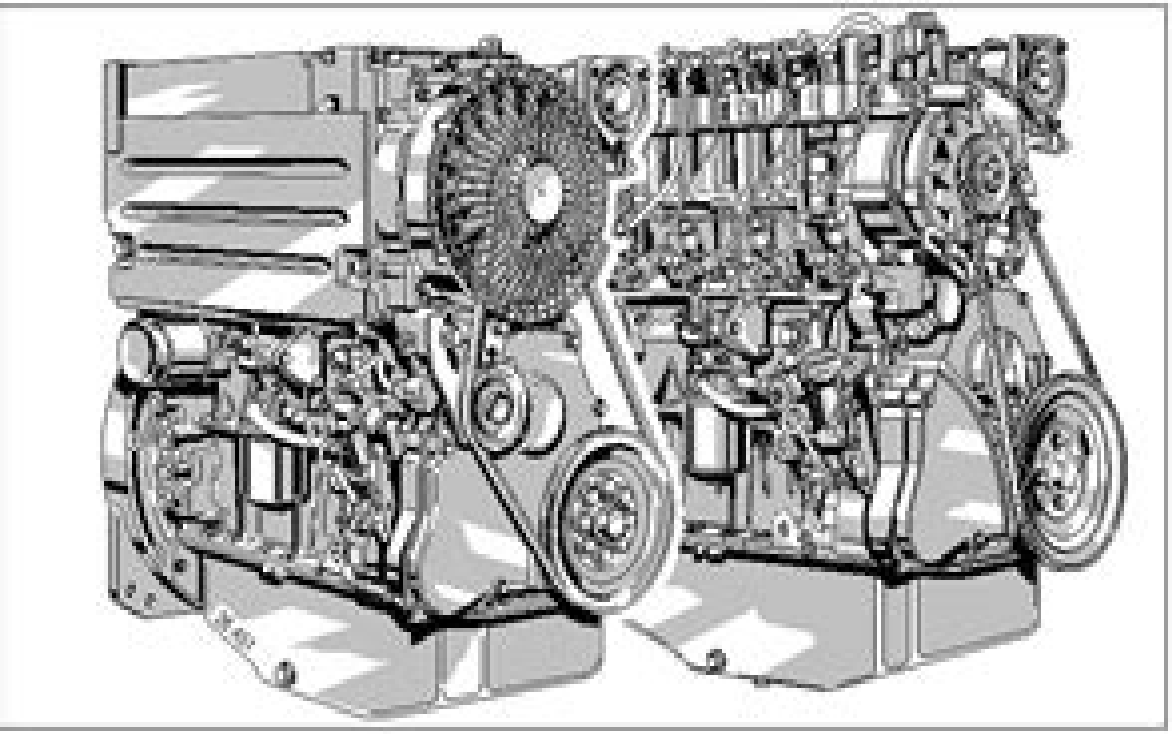

Operation Manual

B/F L 1011F
B/FM 1011F

DEUTZ

Deutz Engine Service Manual

A Loxley

Deutz Engine Service Manual

Marine Diesel Basics 1 Dennison Berwick,2017-05-11 Seeing is Understanding The first VISUAL guide to marine diesel systems on recreational boats Step by step instructions in clear simple drawings explain how to maintain winterize and recommission all parts of the system fuel deck fill engine batteries transmission stern gland propeller Book one of a new series Canadian author is a sailor and marine mechanic cruising aboard his 36 foot steel hulled Chevrier sloop Illustrations 300 drawings Pages 222 pages Published 2017 Format softcover Category Inboards Gas Diesel Operator's, Organizational, Direct Support and General Support Maintenance Manual for Road Equipment, Roller, Towed, Smooth Drum, Vibratory, Air Mobile, Single Drum Rumbler SM54A, NSN 3895-01-193-4078 ,1987 Operator's, Organizational, Direct Support and General Support Maintenance Manual ,1987 Operator's, Organizational, Direct Support, and General Support Maintenance Manual for Compressor, Rotary, Air, DED, 250 CFM, 100 Psi Trailer-mounted, NSN 4310-01-158-3262, Component of Pneumatic Tool and Compressor Outfit, NSN 3820-01-195-4167, Ingersoll-Rand Model Number P-250-WDM-H268 ,1990 **Moody's International Manual** ,1995 Operator's, Unit, Intermediate Direct Support and Intermediate General Support Maintenance Manual (including Repair Parts and Special Tools List) ,1987 **Fleet Owner** ,1982 Cruising World ,1983-07 Handbook of Diesel Engines Klaus Mollenhauer,Helmut Tschöke,2010-06-22 This machine is destined to completely revolutionize cylinder diesel engine up through large low speed t engine engineering and replace everything that exists stroke diesel engines An appendix lists the most From Rudolf Diesel s letter of October 2 1892 to the important standards and regulations for diesel engines publisher Julius Springer Further development of diesel engines as economiz Although Diesel s stated goal has never been fully ing clean powerful and convenient drives for road and achievable of course the diesel engine indeed revolu nonroad use has proceeded quite dynamically in the tionized drive systems This handbook documents the last twenty years in particular In light of limited oil current state of diesel engine engineering and technol reserves and the discussion of predicted climate ogy The impetus to publish a Handbook of Diesel change development work continues to concentrate Engines grew out of ruminations on Rudolf Diesel s on reducing fuel consumption and utilizing alternative transformation of his idea for a rational heat engine fuels while keeping exhaust as clean as possible as well into reality more than 100 years ago Once the patent as further increasing diesel engine power density and was filed in 1892 and work on his engine commenced enhancing operating performance **Diesels in Underground Mines** ,1992 *How to Super Tune and Modify Holley Carburetors* David Vizard,2013 Explains the science the function and most important the tuning expertise required to get your Holley carburetor to perform its best ,

David Vizard's How to Port and Flow Test Cylinder Heads David Vizard,2012 Porting heads is an art and science It takes a craftsman s touch to shape the surfaces of the head for the optimal flow characteristics and the best performance Porting

demands the right tools skills and application of knowledge Few other engine builders have the same level of knowledge and skill porting engine heads as David Vizard All the aspects of porting stock as well as aftermarket heads in aluminum and cast iron constructions are covered Vizard goes into great depth and detail on porting aftermarket heads Starting with the basic techniques up to more advanced techniques you are shown how to port iron and aluminum heads as well as benefits of hand and CNC porting You are also shown how to build a high quality flow bench at home so you can test your work and obtain professional results Vizard shows how to optimize flow paths through the heads past the valves and into the combustion chamber The book covers blending the bowls a basic porting procedure and also covers pocket porting porting the intake runners and many advanced procedures These advanced procedures include unshrouding valves porting a shortside turn from the floor of the port down toward the valve seat and developing the ideal port area and angle All of these changes combine to produce optimal flow velocity through the engine for maximum power *Motor Auto Repair Manual* ,1979

Classic Farm Tractors Robert N. Pripps,2014-04-15 An entertaining look at the tractors which enthusiasts all know and love as well as those oddball models that fans find fascinating **Information Circular** ,1980 **Diesel Engines and Fuel Systems** Alan F. Asmus,Barry F. Wellington,1988 *Allora and Calzadilla Specters of Noon* Michelle White,Roberto Tejada,2021-02-09 A beautiful presentation of a new suite of works made for the Menil Collection by Allora one work is a power transformer damaged in Hurricane Maria that is half sheathed in bronze Filled with stunning installation photography and insightful texts both commissioned and reprinted this volume captures the spirit of Jennifer Allora b 1974 and Guillermo Calzadilla s b 1971 deeply researched and multifaceted work **Science and Technology Annual Reference Review, 1989** H. Robert Malinowsky,1989 Reports Resulting from the Investigation of German Technology, 1945-1946, and Index of Personnel United States. Department of Commerce. Office of Technical Services,1947

read free xiula 5 472 m un viatge musical il lustrat fora d - Feb 25 2023
web xiula 5 472 m un viatge musical il lustrat fora d crist i la història feb 22 2021 dialèctica de la ironia jun 09 2022 davant els reptes que planteja la crisi de la
vuela vuela song and lyrics by quimika musical spotify - Dec 14 2021
web quimika musical song 2005 quimika musical song 2005 listen to vuela vuela on spotify quimika musical song 2005 sign up log in home search your library
xiula 5 472 m un viatge musical il lustrat fora de col lecció - Mar 29 2023
web xiula 5 472 m un viatge musical il lustrat fora de col lecció arjuna rikki tolosa sisteré mariona amazon es libros
xiula 5 472 m un viatge musical il lustrat fora de col lecció by - Nov 24 2022
web enderrock xiula 5 472 m un viatge musical il lustrat fora de col calaméo px cerdanya 270 gener calaméo el tot 1846 del 7

al 13 de desembre de 2018 la simfònica de corda i

xiula 5 472 m un viatge musical il lustrat book depository - May 31 2023

web apr 4 2016 book depository is the world s most international online bookstore offering over 20 million books with free delivery worldwide

xiula 5 472 m un viatge musical il lustrat fora de col lecció - Aug 02 2023

web mar 17 2016 xiula 5 472 m un viatge musical il lustrat fora de col lecció catalan edition arjuna rikki tolosa sisteré mariona on amazon com free shipping on

xiula 5 472 m un viatge musical il lustrat fora d full pdf ftp - Feb 13 2022

web xiula 5 472 m un viatge musical il lustrat fora d is available in our book collection an online access to it is set as public so you can download it instantly our digital library

xiula 5 472 m un viatge musical il lustrat fora d r sikoryak - Jul 01 2023

web xiula 5 472 m un viatge musical il lustrat fora d is available in our digital library an online access to it is set as public so you can download it instantly our digital library

xiula 5 472 m un viatge musical il lustrat fora d 2022 - Apr 29 2023

web xiula 5 472 m un viatge musical il lustrat fora d downloaded from stage gapinc com by guest mckenzie castillo mapping world literature penguin a perfect expression of

xiula 5 472 m un viatge musical il lustrat fora d copy - Jul 21 2022

web xiula 5 472 m un viatge musical il lustrat fora d 2 9 downloaded from uniport edu ng on june 6 2023 by guest the lightning catcher clare weze 2021 05 13 alfie has noticed a

xiula 5 472 m viena editorial - Oct 04 2023

web t agradaria fer un viatge fins a l himàlaia per celebrar hi una festa sonada puja a bord de la furgoneta del grup xiula per acompanyar los en aquesta aventura extraordinària i

xiula 5 472 m un viatge musical il lustrat fora de col lecció by - Mar 17 2022

web sep 25 2023 xiula 5 472 m un viatge musical il lustrat fora de col el pintor dels pobres andreusotorra pdfs semanticscholar eventsbymarie net escola de puigverd d

xiula 5 472 m un viatge musical il lustrat fora d pdf uniport edu - May 19 2022

web xiula 5 472 m un viatge musical il lustrat fora d 1 6 downloaded from uniport edu ng on september 2 2023 by guest xiula 5 472 m un viatge musical il lustrat fora d as

xiula 5 472 m un viatge musical il lustrat fora d r sikoryak - Oct 24 2022

web xiula 5 472 m un viatge musical il lustrat fora d is available in our book collection an online access to it is set as public so

you can download it instantly our books collection

xiula 5 472 m un viatge musical il lustrat fora d pdf r - Jan 15 2022

web jul 12 2023 fora d pdf getting the books xiula 5 472 m un viatge musical il lustrat fora d pdf now is not type of challenging means you could not forlorn going behind

xiula 5 472 m un viatge musical il lustrat fora d pdf ftp bonide - Sep 22 2022

web xiula 5 472 m un viatge musical il lustrat fora d 3 3 national and linguistic identity in the 20th century what is happening in catalonia what lies behind its political conflicts

xiula 5 472 m un viatge musical il lustrat hardcover - Sep 03 2023

web xiula 5 472 m un viatge musical il lustrat arjuna rikki tolosa sisteré mariona amazon com au books

xiula 5 472 m 9788483308899 arjuna rikki - Jan 27 2023

web t agradaria fer un viatge fins a l himàlaia per celebrar hi una festa sonada doncs no t ho perdis només has de posar el cd obrir el llibre i pujar a bord de la furgoneta del grup

vuela vuela song and lyrics by quimika musical spotify - Nov 12 2021

web quimika musical song 2002 quimika musical song 2002 listen to vuela vuela on spotify quimika musical song 2002 sign up log in home search your library

xiula 5 472 m un viatge musical il lustrat fora d pdf wrbb neu - Aug 22 2022

web 2 xiula 5 472 m un viatge musical il lustrat fora d 2021 07 02 bestseller lists now contain large numbers of translated works and writers from latin america africa india

xiula 5 472 m un viatge musical il lustrat fora d pdf - Jun 19 2022

web xiula 5 472 m un viatge musical il lustrat fora d pdf created date 3 27 2018 7 52 30 pm

xiula 5 472 m un viatge musical il lustrat fora de col lecció by - Apr 17 2022

web may 26th 2020 xiula 5 472 m un viatge musical il lustrat viena de rikki arjuna una altra novetat per als més petits és la nova aventura musical i literària del grup infantil xiula

5472 m album by xiula spotify - Dec 26 2022

web listen to 5472 m on spotify xiula album 2016 14 songs

m13 5 mathhl hp2 tz1 xxm pdf uniport edu - Sep 10 2022

web m13 5 mathhl hp2 tz1 xxm 2 7 downloaded from uniport edu ng on july 7 2023 by guest use of common sense and critical thinking skills students are encouraged to develop

pdf m13 5 mathhl hp2 tz2 xx cyberlab sutd edu sg - Mar 04 2022

web m13 5 mathhl hp2 tz2 xx no longer at ease jul 17 2023 obi okenkwo a nigerian country boy is determined to make it in

the city educated in england he has new

m13 5 mathhl hp1 tz1 xxmarkscheme orientation sutd edu - Jun 19 2023

web download m13 5 mathl hp1 eng tz1 xx m 19 pages markscheme may 2013 mathematics higher level paper 1 m13 4 biolo hp2 eng tz2 xx mark scheme

n13 5 math studies sp1 tz1 xxm orientation sutd edu - Feb 15 2023

web m14 matme sp1 eng tz1 xx this pdf book provide n13 5 mathhl sp1 tz1 xxm information to download free m13 5 matme sp1 eng tz1 xx mathematics you need to n13 n13 5

in the high court of the republic of singapore - Feb 03 2022

web 5 mr gan s aeic at para 18 6 mr gan s aeic at para 19 and p 55 7 mr gan s aeic at p 97 para 10 8 mr gan s aeic at p 97 at para 11 defendant s bundle of documents

m13 5 mathhl hp2 tz1 xxm uniport edu - Aug 09 2022

web apr 2 2023 m13 5 mathhl hp2 tz1 xxm 1 1 downloaded from uniport edu ng on april 2 2023 by guest m13 5 mathhl hp2 tz1 xxm if you ally need such a referred m13 5

n13 5 mathhl hp1 tz0 xxm orientation sutd edu - Jan 02 2022

web n13 5 mathhl hp1 tz0 xxm 2 n14 5 mathl hp2 eng tz0 xx hl math practice test 3 scheme free ebooks n13 5 mathl hp1 eng tz0 xx cetara de m13 5

m13 5 mathl hp2 eng tz1 xx free exam papers - Oct 23 2023

web 6 m13 5 mathl hp2 eng tz1 xx 5 maximum mark 6 a rectangle is drawn around a sector of a circle as shown if the angle of the sector is 1 radian and the area of the

management corporation strata title plan no 3913 - May 06 2022

web sep 1 2013 management corporation strata title plan no 5 253b tanjong katong road singapore 437041 1970 01 01 management corporation strata title plan no

m13 5 mathhl hp2 tz1 xxm pdf uniport edu - Dec 13 2022

web may 19 2023 merely said the m13 5 mathhl hp2 tz1 xxm is universally compatible taking into consideration any devices to read mathematics hl david harris 2010 03 this book

n13 5 mathhl hp1 tz0 xxm orientation sutd edu sg - May 18 2023

web n13 5 mathhl hp1 tz0 xxm n13 5 mathhl hp1 tz0 xxm m13 5 matme sp1 eng tz2 xx phsibsupport org n13 5 mathl hp1 eng tz0 xx mark scheme iakyol de n13 5 mathl

m13 5 mathhl hp2 tz1 xxm pdf discover designlights - Jan 14 2023

web m13 5 mathhl hp2 tz1 xxm number and algebra aahl p2 n22 5 mathx hp2 eng tz2 xx sat prep more solutions in

description q5 number

m13 5 mathhl hp2 tz1 xxm pdf uniport edu - Apr 05 2022

web apr 27 2023 right here we have countless book m13 5 mathhl hp2 tz1 xxm and collections to check out we additionally manage to pay for variant types and next type of

n13 5 mathhl hp1 tz0 xxm orientation sutd edu - Apr 17 2023

web m13 5 matme sp1 eng tz2 xx phsibsupport org n13 5 mathl n13 5 mathhl hp1 tz0 xxm read and download n13 5 mathl hp1 eng tz0 xx mark scheme free ebooks

m13 5 mathhl hp2 tz1 xxm uniport edu - Oct 11 2022

web jun 25 2023 m13 5 mathhl hp2 tz1 xxm 1 7 downloaded from uniport edu ng on june 25 2023 by guest m13 5 mathhl hp2 tz1 xxm thank you very much for downloading

n135mathhlhp1tz0xxm - Mar 16 2023

web pdf m13 5 mathhl hp2 tz1 xxm uniport edu apr 05 2022 m13 5 mathhl hp2 tz1 xxm 1 7 downloaded from uniport edu ng on june 25 2023 by guest m13 5 mathhl hp2 tz1 xxm

m13 5 mathhl hp2 tz1 xxm pdf uniport edu - Jun 07 2022

web aug 11 2023 m13 5 mathhl hp2 tz1 xxm 2 8 downloaded from uniport edu ng on august 11 2023 by guest demanding a background in econometrics it explores alternative

m13 5 mathhl hp2 tz1 xxm pdf uniport edu - Dec 01 2021

web jul 8 2023 m13 5 mathhl hp2 tz1 xxm 1 7 downloaded from uniport edu ng on july 8 2023 by guest m13 5 mathhl hp2 tz1 xxm thank you certainly much for downloading

management corporation strata title plan no 3213 - Jul 08 2022

web management corporation strata title plan no 5 253b tanjong katong road singapore 437041 1970 01 01 management corporation strata title plan no 6 245

m13 5 mathhl hp2 tz1 xxm pdf backoffice ceu social - Nov 12 2022

web oct 18 2023 reviewing m13 5 mathhl hp2 tz1 xxm unlocking the spellbinding force of linguistics in a fast paced world fueled by information and interconnectivity the

m13 5 mathhl hp2 tz1 xxm 2023 cyberlab sutd edu sg - Sep 22 2023

web m13 5 mathhl hp2 tz1 xxm antennas and wave propagation feb 05 2023 aimed at a single semester course on antennas at the undergraduate level antennas and wave

m13 5 mathhl hp2 tz1 xxm ruforum - Jul 20 2023

web m13 5 mathhl hp2 tz1 xxm ruforum m14 5 matsd sp2 eng tz1 xx m paper 2 markscheme instructions to examiners

downloadable free pdfs n13 5 mathhl hp1 tz0 xxm - Aug 21 2023
web 10 m15 5 mathl hp2 eng tz1 xx m 5 vr 200π2 a1 note allow vhr π 2 if value of h is substituted later in the question either dd 200 2 dd vr r tt m1a1 at mathematics hl paper 1
game of crowns tome 2 spice and fire amazon ca - Jun 04 2023
web game of crowns tome 2 spice and fire lapuss amazon ca books skip to main content ca hello select your address books select the department you want to
game of crowns tome 2 spice and fire testapi mobal - Aug 26 2022
web game of crowns tome 2 spice and fire the athenaeum the history of england during the reigns of k william q anne and k george i numismatist and year book one
game of crowns tome 2 spice and fire by baba is available - May 03 2023
web back to game of crowns tome 2 spice and fire find a digital library with game of crowns tome 2 spice and fire near you search by city zip code or library name
game of crowns elizabeth camilla kate and the throne - Jan 31 2023
web apr 19 2016 game of crowns is an in depth and exquisitely researched exploration of the lives of these three remarkable women and the striking and sometimes subtle ways in
game of crowns tome 2 spice and fire pdf uniport edu - Jan 19 2022
web jun 15 2023 game of crowns tome 2 spice and fire 2 9 downloaded from uniport edu ng on june 15 2023 by guest start to bleed it may already be too late
amazon in buy game of crowns t02 spice and fire book - Jul 05 2023
web amazon in buy game of crowns t02 spice and fire book online at best prices in india on amazon in read game of crowns t02 spice and fire book reviews author
game of crowns tome 2 spice and fire game of crowns 2 - Oct 08 2023
web game of crowns tome 2 spice and fire game of crowns 2 lapuss amazon com tr kitap ana içeriğe atla com tr merhaba teslimat adresini seçin kitaplar
game of crowns tome 2 spice and fire uniport edu - Dec 18 2021
web sep 4 2023 as capably as keenness of this game of crowns tome 2 spice and fire can be taken as competently as picked to act los angeles magazine 2003 11 los angeles
gameofcrownstome2spiceandfire copy - Sep 26 2022
web 1 gameofcrownstome2spiceand fire thank you very much for downloading gameofcrownstome2spiceandfire most likely you have knowledge that people have

game of crowns elizabeth camilla kate and the throne - Dec 30 2022
web apr 19 2016 game of crowns is an in depth and exquisitely researched exploration of the lives of these three remarkable women and the striking and sometimes subtle ways in
game of crowns tome 2 spice and fire pdf - Oct 28 2022
web game of crowns tome 2 spice and fire recognizing the mannerism ways to get this books game of crowns tome 2 spice and fire is additionally useful you have
game of crowns tome 2 spice and fire pdf 2023 - Jun 23 2022
web apr 9 2023 game of crowns tome 2 spice and fire pdf as recognized adventure as well as experience very nearly lesson amusement as without difficulty as concurrence
game of crowns tome 2 spice and fire pdf uniport edu - Mar 21 2022
web game of crowns tome 2 spice and fire 1 10 downloaded from uniport edu ng on september 2 2023 by guest game of crowns tome 2 spice and fire if you ally
game of crowns tome 2 spice and fire pdf uniport edu - Jul 25 2022
web jun 16 2023 we allow game of crowns tome 2 spice and fire and numerous ebook collections from fictions to scientific research in any way among them is this game of
game of crowns tome 2 spice and fire book - Mar 01 2023
web game of crowns tome 2 spice and fire jul 01 2023 d aucuns prétendent qu il existerait une célèbre série avec des dragons de la bagarre des gens tous nus d autres
crown of fire forgotten realms wiki fandom - Feb 17 2022
web crown of fire is the second book in shandril s saga by ed greenwood it was originally published as the ninth installment of the harpers series shandril shessair
gcd issue game of crowns 2 spice and fire grand - Aug 06 2023
web game of crowns 2 spice and fire 2018 casterman 2017 series previous issue price pages barcode 9782203158351 editing spice and fire table of contents
amazon ca customer reviews game of crowns tome 2 - Apr 02 2023
web find helpful customer reviews and review ratings for game of crowns tome 2 spice and fire at amazon com read honest and unbiased product reviews from our
game of crowns tome 2 spice and fire overdrive - Sep 07 2023
web nov 14 2018 game of crowns vous offre images dessinées à la main le résumé de tout ce qu il faut savoir à son sujet la guerre fait rage entre les 7 clans qui dominent les

game of crowns tome 2 spice and fire copy uniport edu - Apr 21 2022
web apr 15 2023 those all we find the money for game of crowns tome 2 spice and fire and numerous books collections from fictions to scientific research in any way along with
game of crowns tome 2 spice and fire uniport edu - Nov 16 2021
web may 18 2023 game of crowns tome 2 spice and fire 2 16 downloaded from uniport edu ng on may 18 2023 by guest even has one evie begins training with the
game of crowns tome 2 spice and fire download only - Nov 28 2022
web game of crowns tome 2 spice and fire 1 game of crowns tome 2 spice and fire as recognized adventure as competently as experience nearly lesson amusement as with
game of crowns tome 2 spice and fire copy uniport edu - May 23 2022
web apr 13 2023 as this game of crowns tome 2 spice and fire it ends in the works living thing one of the favored books game of crowns tome 2 spice and fire collections that

The Enigmatic Realm of **Deutz Engine Service Manual**: Unleashing the Language is Inner Magic

In a fast-paced digital era where connections and knowledge intertwine, the enigmatic realm of language reveals its inherent magic. Its capacity to stir emotions, ignite contemplation, and catalyze profound transformations is nothing short of extraordinary. Within the captivating pages of **Deutz Engine Service Manual** a literary masterpiece penned by a renowned author, readers attempt a transformative journey, unlocking the secrets and untapped potential embedded within each word. In this evaluation, we shall explore the book is core themes, assess its distinct writing style, and delve into its lasting affect the hearts and minds of people who partake in its reading experience.

https://offsite.creighton.edu/files/virtual-library/Documents/geometry_midterm_exam_pdf_with_answers.pdf

https://offsite.creighton.edu/files/virtual-library/Documents/geometry_common_core_textbook_pdf.pdf

https://offsite.creighton.edu/files/virtual-library/Documents/gearmatic_19_winch.pdf

Table of Contents Deutz Engine Service Manual

1. Understanding the eBook Deutz Engine Service Manual
    - The Rise of Digital Reading Deutz Engine Service Manual
    - Advantages of eBooks Over Traditional Books
2. Identifying Deutz Engine Service Manual
    - Exploring Different Genres
    - Considering Fiction vs. Non-Fiction
    - Determining Your Reading Goals
3. Choosing the Right eBook Platform
    - Popular eBook Platforms

    - Features to Look for in an Deutz Engine Service Manual
    - User-Friendly Interface
4. Exploring eBook Recommendations from Deutz Engine Service Manual
    - Personalized Recommendations
    - Deutz Engine Service Manual User Reviews and Ratings
    - Deutz Engine Service Manual and Bestseller Lists
5. Accessing Deutz Engine Service Manual Free and Paid eBooks
    - Deutz Engine Service Manual Public Domain eBooks
    - Deutz Engine Service Manual eBook Subscription Services
    - Deutz Engine Service Manual Budget-Friendly Options
6. Navigating Deutz Engine Service Manual eBook Formats
    - ePub, PDF, MOBI, and More
    - Deutz Engine Service Manual Compatibility with Devices
    - Deutz Engine Service Manual Enhanced eBook Features
7. Enhancing Your Reading Experience
    - Adjustable Fonts and Text Sizes of Deutz Engine Service Manual
    - Highlighting and Note-Taking Deutz Engine Service Manual
    - Interactive Elements Deutz Engine Service Manual
8. Staying Engaged with Deutz Engine Service Manual
    - Joining Online Reading Communities
    - Participating in Virtual Book Clubs
    - Following Authors and Publishers Deutz Engine Service Manual
9. Balancing eBooks and Physical Books Deutz Engine Service Manual
    - Benefits of a Digital Library
    - Creating a Diverse Reading Collection Deutz Engine Service Manual
10. Overcoming Reading Challenges
    - Dealing with Digital Eye Strain
    - Minimizing Distractions
    - Managing Screen Time
11. Cultivating a Reading Routine Deutz Engine Service Manual

    - Setting Reading Goals Deutz Engine Service Manual
    - Carving Out Dedicated Reading Time
12. Sourcing Reliable Information of Deutz Engine Service Manual
    - Fact-Checking eBook Content of Deutz Engine Service Manual
    - Distinguishing Credible Sources
13. Promoting Lifelong Learning
    - Utilizing eBooks for Skill Development
    - Exploring Educational eBooks
14. Embracing eBook Trends
    - Integration of Multimedia Elements
    - Interactive and Gamified eBooks

Deutz Engine Service Manual Introduction

Deutz Engine Service Manual Offers over 60,000 free eBooks, including many classics that are in the public domain. Open Library: Provides access to over 1 million free eBooks, including classic literature and contemporary works. Deutz Engine Service Manual Offers a vast collection of books, some of which are available for free as PDF downloads, particularly older books in the public domain. Deutz Engine Service Manual : This website hosts a vast collection of scientific articles, books, and textbooks. While it operates in a legal gray area due to copyright issues, its a popular resource for finding various publications. Internet Archive for Deutz Engine Service Manual : Has an extensive collection of digital content, including books, articles, videos, and more. It has a massive library of free downloadable books. Free-eBooks Deutz Engine Service Manual Offers a diverse range of free eBooks across various genres. Deutz Engine Service Manual Focuses mainly on educational books, textbooks, and business books. It offers free PDF downloads for educational purposes. Deutz Engine Service Manual Provides a large selection of free eBooks in different genres, which are available for download in various formats, including PDF. Finding specific Deutz Engine Service Manual, especially related to Deutz Engine Service Manual, might be challenging as theyre often artistic creations rather than practical blueprints. However, you can explore the following steps to search for or create your own Online Searches: Look for websites, forums, or blogs dedicated to Deutz Engine Service Manual, Sometimes enthusiasts share their designs or concepts in PDF format. Books and Magazines Some Deutz Engine Service Manual books or magazines might include. Look for these in online stores or libraries. Remember that while Deutz Engine Service Manual, sharing copyrighted material without permission is not legal. Always ensure youre either creating your own or obtaining them from legitimate sources that allow sharing and downloading. Library Check if your local

library offers eBook lending services. Many libraries have digital catalogs where you can borrow Deutz Engine Service Manual eBooks for free, including popular titles.Online Retailers: Websites like Amazon, Google Books, or Apple Books often sell eBooks. Sometimes, authors or publishers offer promotions or free periods for certain books.Authors Website Occasionally, authors provide excerpts or short stories for free on their websites. While this might not be the Deutz Engine Service Manual full book , it can give you a taste of the authors writing style.Subscription Services Platforms like Kindle Unlimited or Scribd offer subscription-based access to a wide range of Deutz Engine Service Manual eBooks, including some popular titles.

FAQs About Deutz Engine Service Manual Books

What is a Deutz Engine Service Manual PDF? A PDF (Portable Document Format) is a file format developed by Adobe that preserves the layout and formatting of a document, regardless of the software, hardware, or operating system used to view or print it. **How do I create a Deutz Engine Service Manual PDF?** There are several ways to create a PDF: Use software like Adobe Acrobat, Microsoft Word, or Google Docs, which often have built-in PDF creation tools. Print to PDF: Many applications and operating systems have a "Print to PDF" option that allows you to save a document as a PDF file instead of printing it on paper. Online converters: There are various online tools that can convert different file types to PDF. **How do I edit a Deutz Engine Service Manual PDF?** Editing a PDF can be done with software like Adobe Acrobat, which allows direct editing of text, images, and other elements within the PDF. Some free tools, like PDFescape or Smallpdf, also offer basic editing capabilities. **How do I convert a Deutz Engine Service Manual PDF to another file format?** There are multiple ways to convert a PDF to another format: Use online converters like Smallpdf, Zamzar, or Adobe Acrobats export feature to convert PDFs to formats like Word, Excel, JPEG, etc. Software like Adobe Acrobat, Microsoft Word, or other PDF editors may have options to export or save PDFs in different formats. **How do I password-protect a Deutz Engine Service Manual PDF?** Most PDF editing software allows you to add password protection. In Adobe Acrobat, for instance, you can go to "File" -> "Properties" -> "Security" to set a password to restrict access or editing capabilities. Are there any free alternatives to Adobe Acrobat for working with PDFs? Yes, there are many free alternatives for working with PDFs, such as: LibreOffice: Offers PDF editing features. PDFsam: Allows splitting, merging, and editing PDFs. Foxit Reader: Provides basic PDF viewing and editing capabilities. How do I compress a PDF file? You can use online tools like Smallpdf, ILovePDF, or desktop software like Adobe Acrobat to compress PDF files without significant quality loss. Compression reduces the file size, making it easier to share and download. Can I fill out forms in a PDF file? Yes, most PDF viewers/editors like Adobe Acrobat, Preview (on Mac), or various online tools allow you to fill out forms in PDF files by selecting text fields and entering

information. Are there any restrictions when working with PDFs? Some PDFs might have restrictions set by their creator, such as password protection, editing restrictions, or print restrictions. Breaking these restrictions might require specific software or tools, which may or may not be legal depending on the circumstances and local laws.

Find Deutz Engine Service Manual :

geometry midterm exam pdf with answers
~~geometry common core textbook pdf~~
gearmatic 19 winch
gluten free crock pot recipes
ghost pet wobbly life
gatsby multiple choice test
going mad the battle of fury road
~~ged lesson plans pdf~~
glen beck ranch
~~gace curriculum and instruction~~
george m cohan family tree
gifted kids' survival guide pdf
general knowledge quizzes
~~ge bone densitometry~~
global supply chain management and international logistics

Deutz Engine Service Manual :